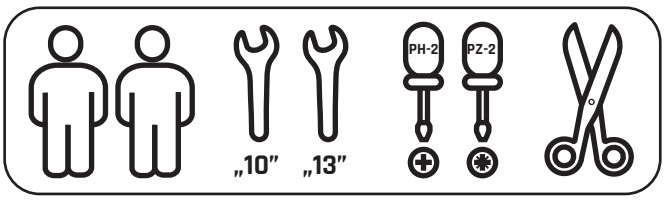
„10"
„13"
PH-2
PZ-2

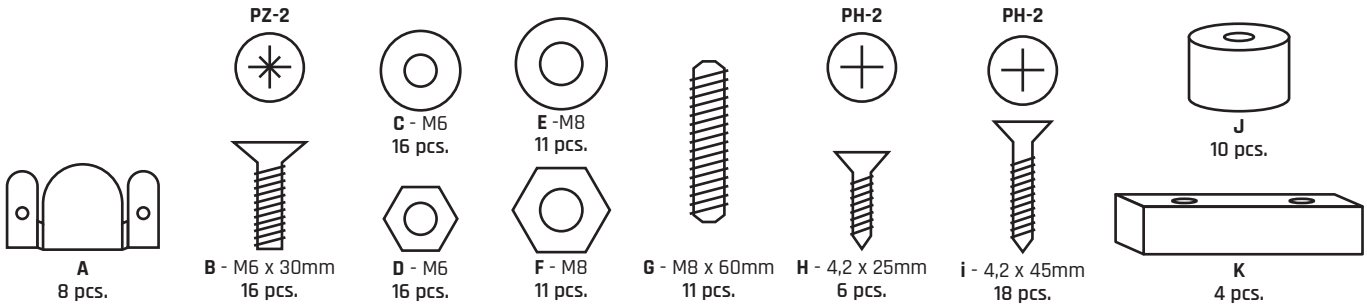
PZ-2
PH-2
PH-2
A
8 pcs.
B - M6 x 30mm
16 pcs.
C - M6
16 pcs.
D - M6
16 pcs.
E -M8
11 pcs.
F - M8
11 pcs.
G - M8 x 60mm
11 pcs.
H - 4,2 x 25mm
6 pcs.
i - 4,2 x 45mm
18 pcs.
J
10 pcs.
K
4 pcs.

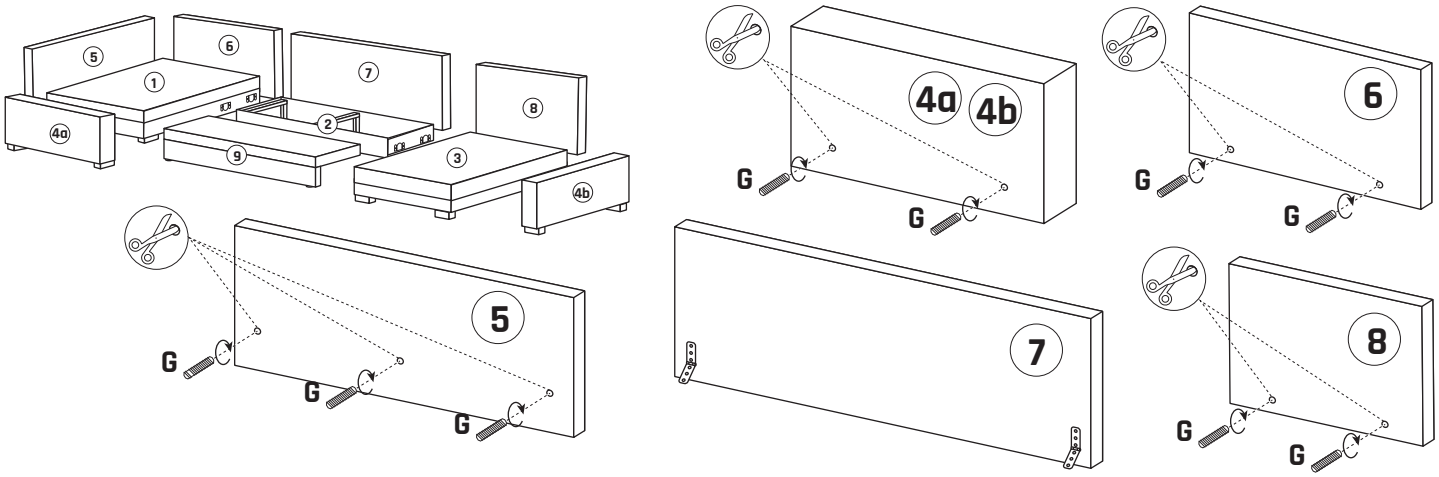
5
6
1
7
8
4a
2
9
3
4b
4a
4b
G
G
6
G
G
5
G
G
G
7
8
G
G

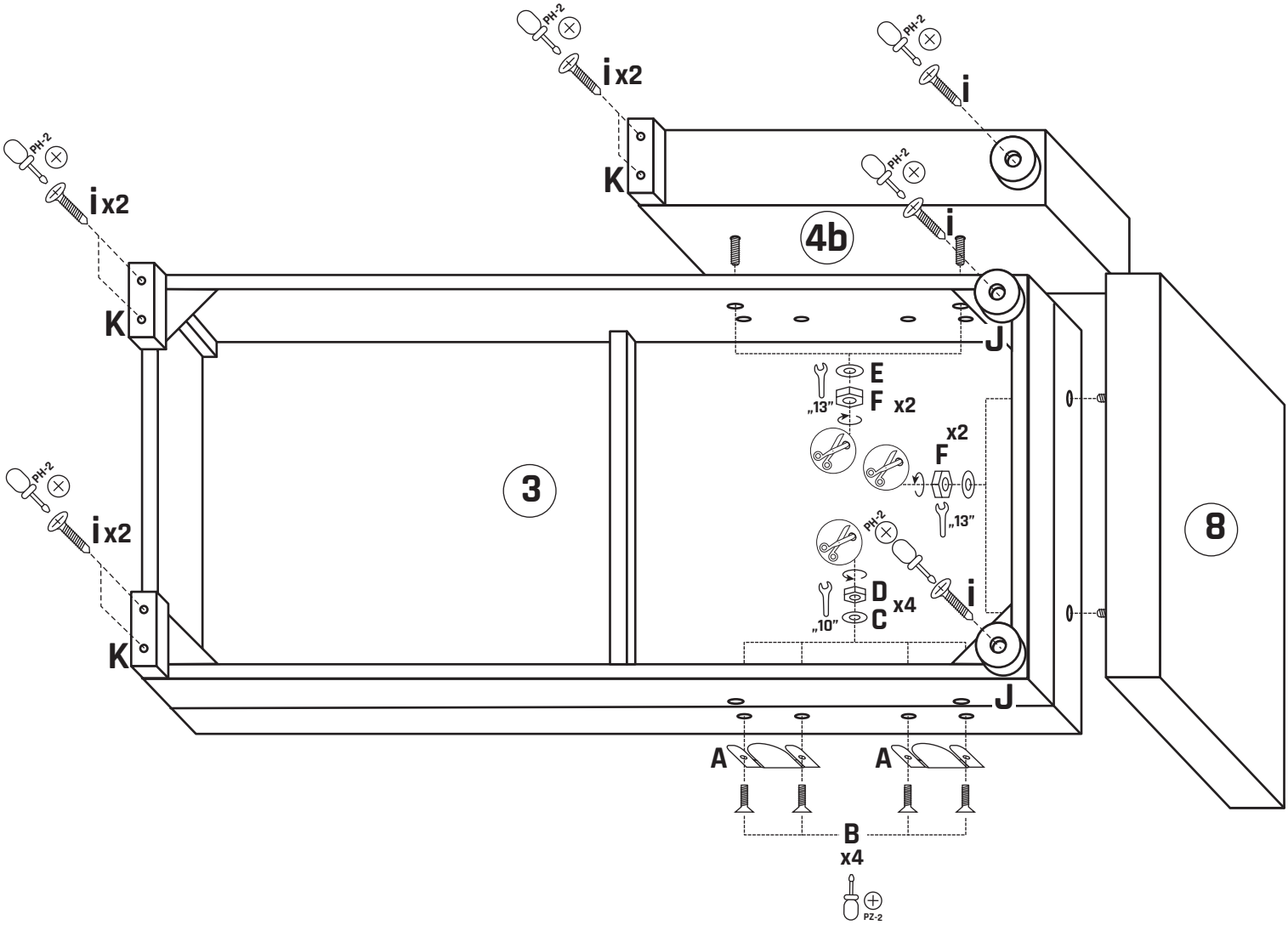
PH-2
i x2
K
PH-2
i
PH-2
i x2
K
4b
PH-2
i
J
E
„13"
F x2
x2
F
„13"
3
PH-2
i x2
PH-2
D
C x4
i
„10"
8
K
J
A
A
B
x4
PZ-2

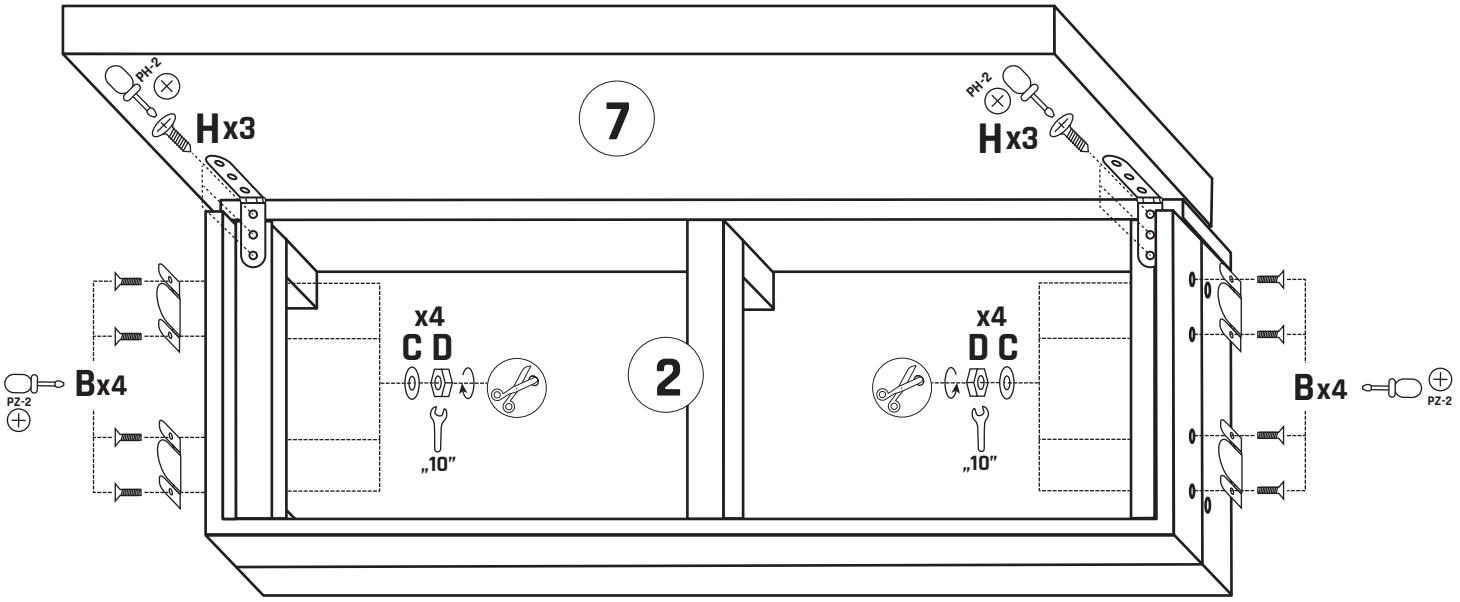
7
2
PH-2
Hx3
Hx3
x4
C D
„10”
x4
D C
„10”
Bx4
PZ-2
Bx4
PZ-2

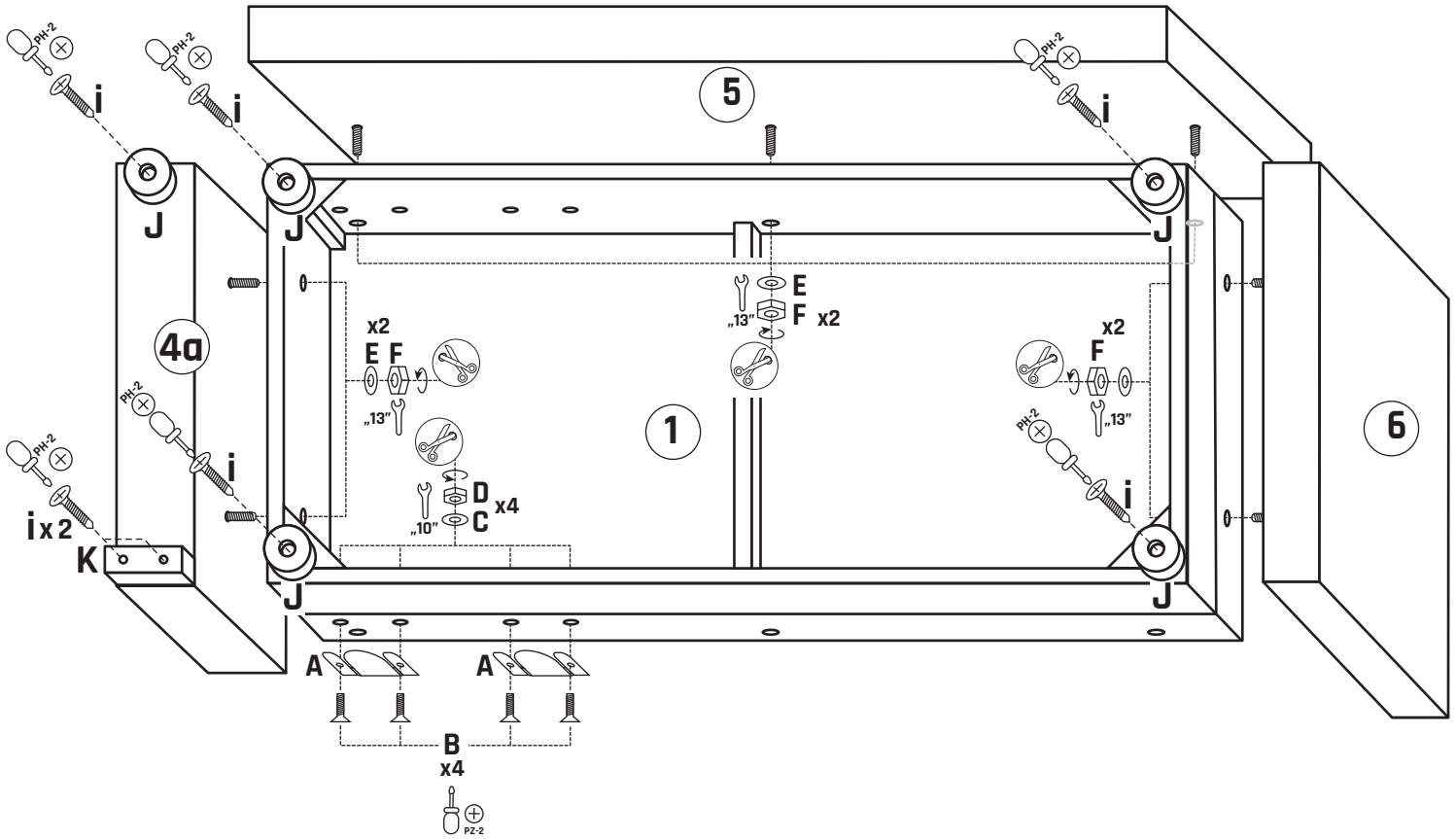
5
1
4a
6
PH-2
i
J
K
ix2
x2
E F
„13”
E
F x2
„13”
x2
F
„13”
D
C x4
„10”
A
A
B
x4
PZ-2

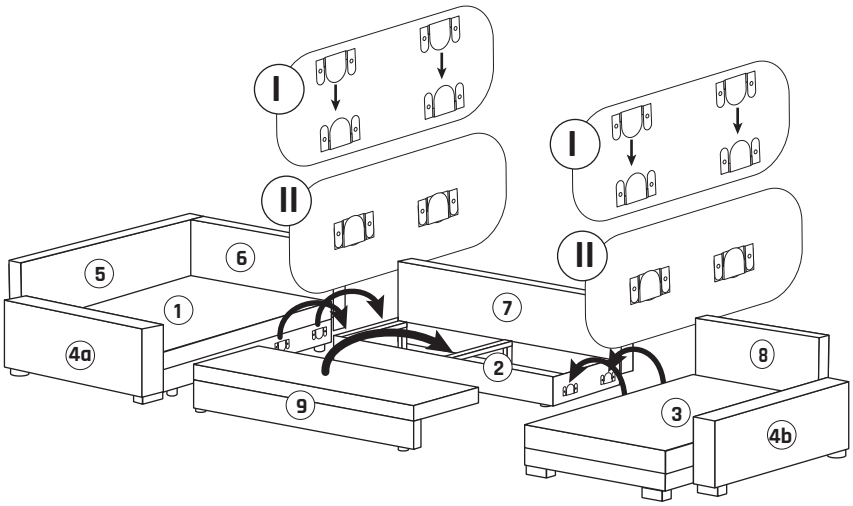
I
II
I
II
5
6
1
4a
7
2
9
8
3
4b